Technical and Test Institute for Construction Prague
Prosecká 811/76a
190 00 Prague
Czech Republic
eota@tzus.cz

Designated according to Article 29 of Regulation (EU) No 305/2011

Member of EOTA
www.eota.eu

European Technical Assessment

ETA 19/0152
of 14/03/2019

Technical Assessment Body issuing the ETA: Technical and Test Institute for Construction Prague	
Trade name of the construction product	SMART S-IRP
Product family to which the construction product belongs	Product area code: 33 Injection anchors for use in masonry
Manufacturer	pgb-Polska Sp. z o.o., ul. Fryderyka Wilhelma Redena 3 41-807 Zabrze Polska
Manufacturing plant(s)	pgb-Polska Sp. z o.o. Plant 1
This European Technical Assessment contains	16 pages including 13 Annexes which form an integral part of this assessment.
This European Technical Assessment is issued in accordance with regulation (EU) No 305/2011, on the basis of	EAD 330076-00-0604

Translations of this European Technical Assessment in other languages shall fully correspond to the original issued document and should be identified as such.

1. Technical description of the product

The SMART S-IRP for masonry is a bonded anchor consisting of a cartridge with injection mortar, a plastic sieve sleeve and an anchor rod with hexagon nut and washer or internal threaded socket. The steel elements are made of galvanized steel or stainless steel.

The sieve sleeve is pushed into a drilled hole and filled with injection mortar before the anchor rod or the socket with internal thread is placed in the sieve sleeve. The installation of the anchor rod in solid masonry can be also done without a sieve sleeve. The steel element is anchored via the bond between metal part, injection mortar and masonry.

The illustration and the description of the product are given in Annex A.

2. Specification of the intended use in accordance with the applicable EAD

The performances given in Section 3 are only valid if the anchor is used in compliance with the specifications and conditions given in Annex B.

The provisions made in this European Technical Assessment are based on an assumed working life of the anchor of 50 years. The indications given on the working life cannot be interpreted as a guarantee given by the producer, but are to be regarded only as a means for choosing the products in relation to the expected economically reasonable working life of the works.

3. Performance of the product and references to the methods used for its assessment

3.1 Mechanical resistance and stability (BWR 1)

Essential characteristic	Performance
Characteristic resistance for tension and shear loads	See Annex C 1
Reduction factor for job site tests (β – factor)	See Annex C 1
Edge distances and spacing	See Annex B 7
Displacement under shear and tension loads	See Annex C 1
Durability	See Annex A 3

3.2 Safety in case of fire (BWR 2)

Essential characteristic	Performance
Reaction to fire	Anchorages satisfy requirements for Class A1

3.3 Hygiene, health and environment (BWR 3)

No performance determined.

3.4 General aspects relating to fitness for use

Durability and serviceability are only ensured if the specifications of intended use according to Annex B 1 are kept.

4. Assessment and verification of constancy of performance (AVCP) system applied with reference to its legal base

According to the Decision 97/177/EC of the European Commission[1], the system of assessment and verification of constancy of performance (see Annex V to Regulation (EU) No 305/2011) given in the following table applies.

Product	Intended use	Level or class	System
Injection anchors for use in masonry	For fixing and/or supporting to masonry, structural elements (which contributes to the stability of the works) or heavy units	-	1

[1] Official Journal of the European Communities L 073 of 14.03.1997

5. Technical details necessary for the implementation of the AVCP system, as provided in the applicable EAD

5.1 Tasks of the manufacturer

The manufacturer may only use raw materials stated in the technical documentation of this European Technical Assessment.

The factory production control shall be in accordance with the control plan which is a part of the technical documentation of this European Technical Assessment. The control plan is laid down in the context of the factory production control system operated by the manufacturer and deposited at Technical and Test Institute for Construction Prague [2]. The results of the factory production control shall be recorded and evaluated in accordance with the provisions of the control plan.

5.2 Tasks of the notified bodies

The notified body shall retain the essential points of its actions referred to above and state the results obtained and conclusions drawn in a written report.

The notified certification body involved by the manufacturer shall issue a certificate of constancy of performance of the product stating the conformity with the provisions of this European Technical Assessment.

In cases where the provisions of the European Technical Assessment and its control plan are no longer fulfilled, the notified body shall withdraw the certificate of constancy of performance and inform Technical and Test Institute for Construction Prague without delay.

Issued in Prague on 14.03.2019

By

Ing. Mária Schaan
Head of the Technical Assessment Body

[2] The control plan is a confidential part of the documentation of the European technical assessment, but not published together with the ETA and only handed over to the approved body involved in the procedure of AVCP.

Installation in hollow or perforated brick masonry

Installation of anchor rod with sieve sleeve

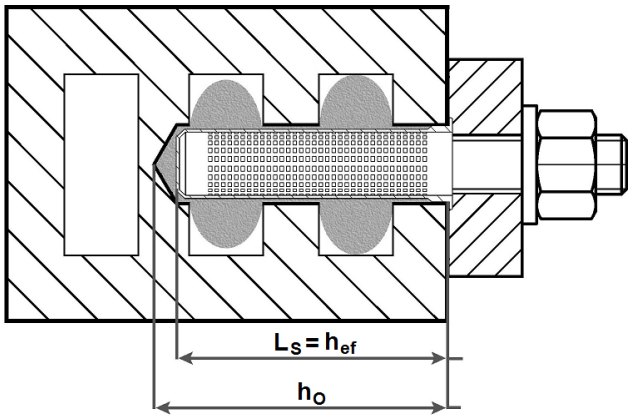

Installation of internal threaded socket with sieve sleeve

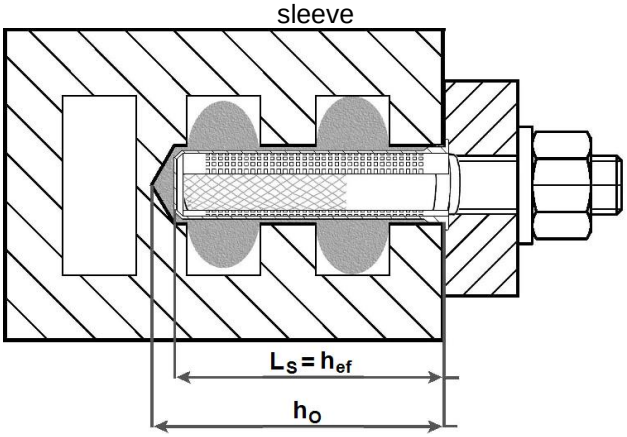

Installation in solid brick masonry

Installation of anchor rod with or without sieve sleeve

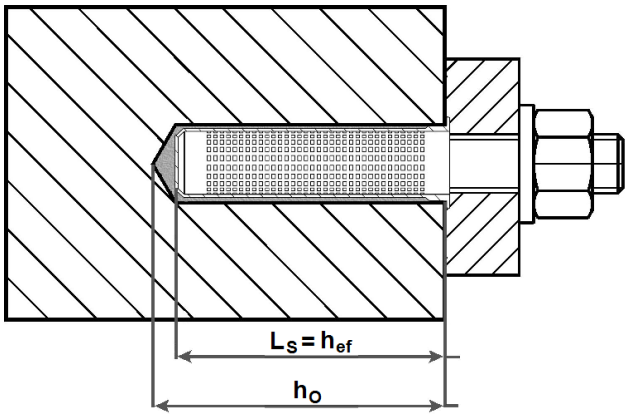

Installation of internal threaded socket with sieve sleeve

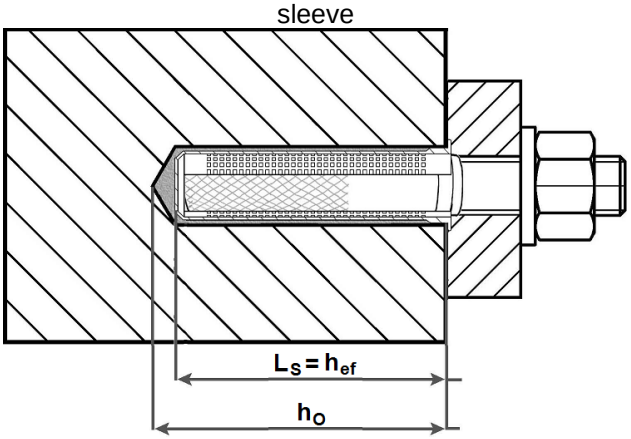

L_s = length of the sieve sleeve

h_{ef} = effective setting depth

h_0 = bore hole depth

SMART S-IRP for masonry	**Annex A 1**
Product description Installed condition	

Coaxial cartridge

SMART S-IRP

150 ml
380 ml
400 ml
410 ml

Side by side cartridge

SMART S-IRP

350 ml
825 ml

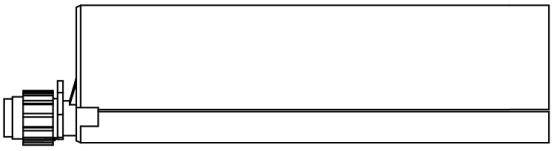

Two part foil in a single piston component cartridge

SMART S-IRP

150 ml
170 ml
300 ml
550 ml
850 ml

Marking of the mortar cartridges

Identifying mark of the producer, Trade name, Charge code number, Storage life, Curing and processing time

Mixing nozzle

SMCH4-01

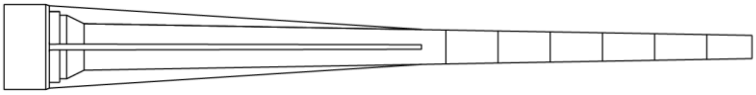

SMCH4-10

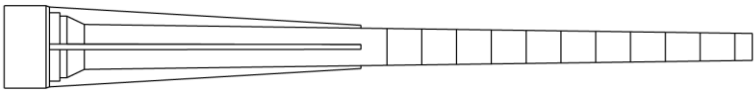

SMCH4-20 SMART EasyFlow

SMCH4-11

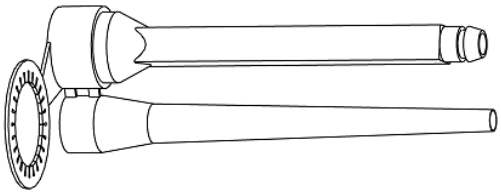

SMCH4-12

SMCH4-06 for 850

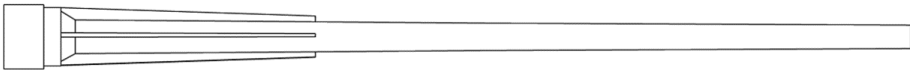

SMART S-IRP **for masonry**	**Annex A 2**
Product description Injection system	

Threaded rod M8, M10, M12

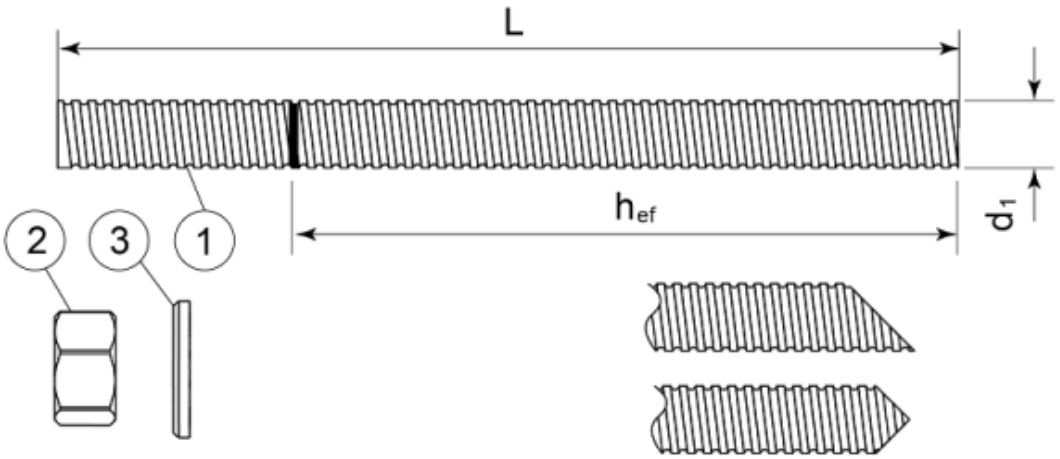

Standard commercial threaded rod with marked embedment depth

Part	Designation	Material
Steel, zinc plated ≥ 5 µm acc. to EN ISO 4042 or Steel, hot-dip galvanized ≥ 40 µm acc. to EN ISO 1461 and EN ISO 10684 or Steel, zinc diffusion coating ≥ 15 µm acc. to EN 13811		
1	Anchor rod	Steel, EN 10087 or EN 10263 Property class 5.8, 8.8, 10.9* EN ISO 898-1
2	Hexagon nut EN ISO 4032	According to threaded rod, EN 20898-2
3	Washer EN ISO 887, EN ISO 7089, EN ISO 7093 or EN ISO 7094	According to threaded rod
Stainless steel		
1	Anchor rod	Material: A2-70, A4-70, A4-80, EN ISO 3506
2	Hexagon nut EN ISO 4032	According to threaded rod
3	Washer EN ISO 887, EN ISO 7089, EN ISO 7093 or EN ISO 7094	According to threaded rod
High corrosion resistant steel		
1	Anchor rod	Material: 1.4529, 1.4565, EN 10088-1
2	Hexagon nut EN ISO 4032	According to threaded rod
3	Washer EN ISO 887, EN ISO 7089, EN ISO 7093 or EN ISO 7094	According to threaded rod

*Galvanized rod of high strength are sensitive to hydrogen induced brittle failure

SMART S-IRP **for masonry**	**Annex A 3**
Product description Threaded rod and materials	

Internal threaded socket

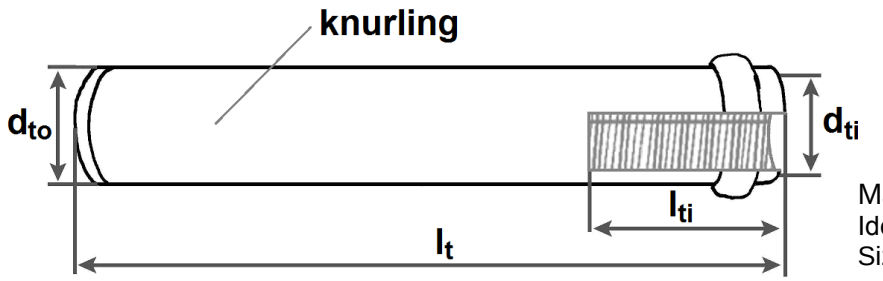

Marking:
Identifying mark of the producer “m”
Size of internal thread e.g. M8

Table A1: Dimensions of internal threaded socket

Internal threaded socket	Inner diameter d_{ti}	Outer diameter d_{to} [mm]	Length of the internal thread l_{ti} [mm]	Total length l_t [mm]
12 x 80	M8	12	30	80
14 x 80	M10	14	30	80
16 x 80	M12	16	30	80

Designation	Material
Internal threaded socket	strength class 5.8 EN ISO 898-1, galvanized ≥ 5 µm EN ISO 4042

Sieve sleeve

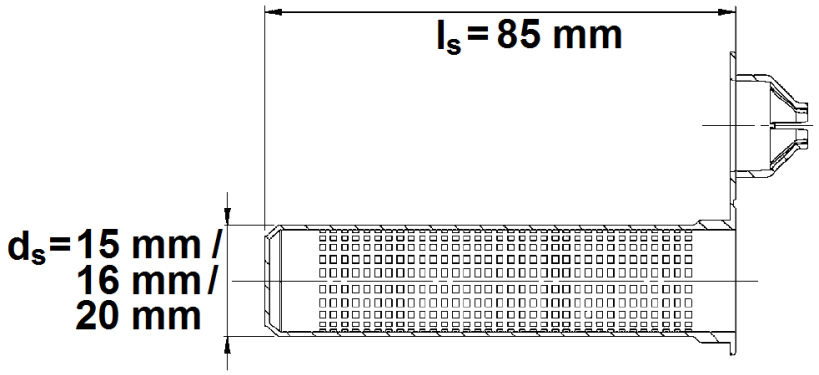

Types:
SH15/85
SH16/85
SH20/85

Designation	Material
Sieve sleeve	Polypropylene

SMART S-IRP for masonry	**Annex A 4**
Product description Internal threaded socket and materials Sleeve	

Specifications of intended use

Anchorages subject to:
- Static and quasi-static loads

Base materials
- Solid brick masonry (Masonry group b), according to Annex B2.
- Hollow brick masonry (Masonry group c), according to Annex B2 to B4.
- Mortar strength class of the masonry M2,5 at minimum according to EN 998-2:2010.
- For other bricks in solid masonry and in hollow or perforated masonry, the characteristic resistance of the anchorages may be determined by job site tests according to EOTA Technical Report TR 053 and under consideration of the β-factor to Annex C1, Table C4.

Note: The characteristic resistance for solid bricks are also valid for larger brick sizes and larger compressive strength of the masonry unit.

Temperature range:
- **T**: -40°C to +80°C (max. short. term temperature +80°C and max. long term temperature +50°C)

Use conditions (Environmental conditions)
- (X1) Structures subject to dry internal conditions (zinc coated steel, stainless steel, high corrosion resistant steel).
- (X2) Structures subject to external atmospheric exposure (including industrial and marine environment) and to permanently damp internal condition, if no particular aggressive conditions exist (stainless steel A4, high corrosion resistant steel).
- (X3) Structures subject to external atmospheric exposure and to permanently damp internal condition, if other particular aggressive conditions exist (high corrosion resistant steel).

Note: Particular aggressive conditions are e.g. permanent, alternating immersion in seawater or the splash zone of seawater, chloride atmosphere of indoor swimming pools or atmosphere with extreme chemical pollution (e.g. in desulphurization plants or road tunnels where de-icing materials are used).

Use conditions in respect of installation and use:
- Category d/d - Installation and use in structures subject to dry, internal conditions
- Category w/d – Installation in wet masonry and use in dry masonry
- Category w/w - Installation and use in wet masonry

Design:
- Verifiable calculation notes and drawings are prepared taking account the relevant masonry in the region of the anchorage, the loads to be transmitted and their transmission to the supports of the structure. The position of the anchor is indicated on the design drawings.
- The anchorage are designed in accordance with the EOTA Technical Report TR 054, Design method A,, under the responsibility of an engineer experienced in anchorages and masonry work.

Installation:
- Dry or wet structures
- Anchor Installation carried out by appropriately qualified personnel and under the supervision of the person responsible for technical matters of the site.

Table B1: Types and dimensions of block and bricks

Brick N° 1

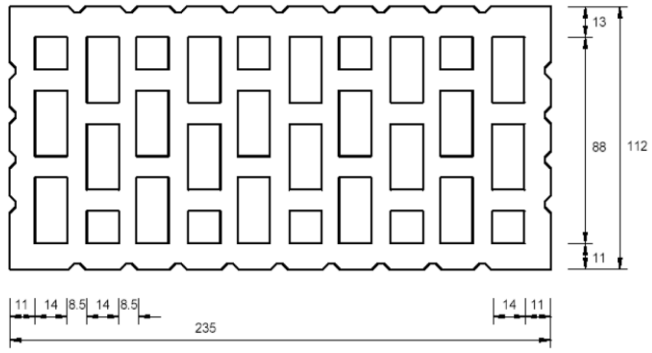

Hollow clay brick HLz 12-1,0-2DF
according to EN 771-1
length/width/height = 235 mm/112 mm/115 mm
$f_b \geq 12$ N/mm^2 / $\rho \geq 1{,}0$ kg/dm^3

Brick N° 2

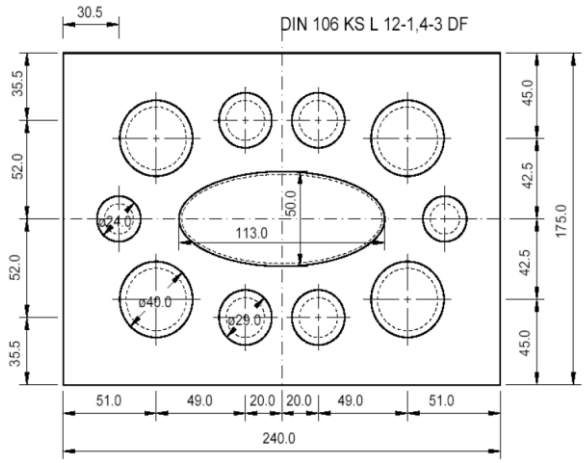

Hollow sand lime brick KSL 12-1,4-3DF
according to EN 771-2
length/width/height = 240 mm/175 mm/113 mm
$f_b \geq 12$ N/mm^2 / $\rho \geq 1{,}4$ kg/dm^3

Brick N° 3

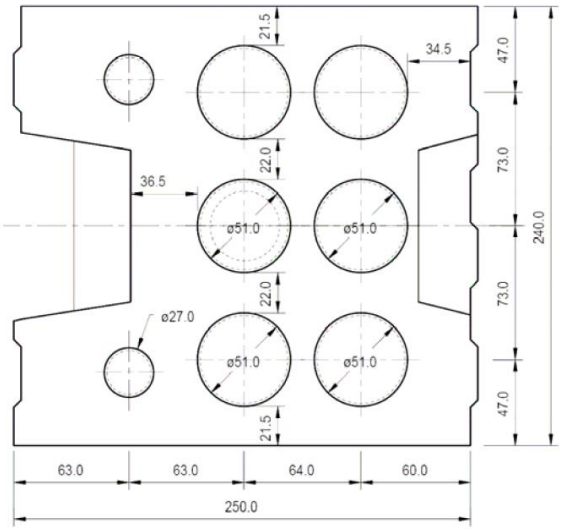

Hollow sand lime brick KSL 12-1,4-8DF
according to EN 771-2
length/width/height = 250 mm/240 mm/237 mm
$f_b \geq 12$ N/mm^2 / $\rho \geq 1{,}4$ kg/dm^3

Brick N° 4

Solid clay brick Mz 12-2,0-NF
according to EN 771-1
length/width/height = 240 mm/116 mm/71 mm
$f_b \geq 12$ N/mm^2 / $\rho \geq 2{,}0$ kg/dm^3

Brick N° 5

Solid sand lime brick KS 12-2,0-NF
according to EN 771-2
length/width/height = 240 mm/115 mm/70 mm
$f_b \geq 12$ N/mm^2 / $\rho \geq 2{,}0$ kg/dm^3

SMART S-IRP
for masonry

Intended use
Brick types and properties

Annex B 2

Table B2: Types and dimensions of block and bricks

Brick N° 6

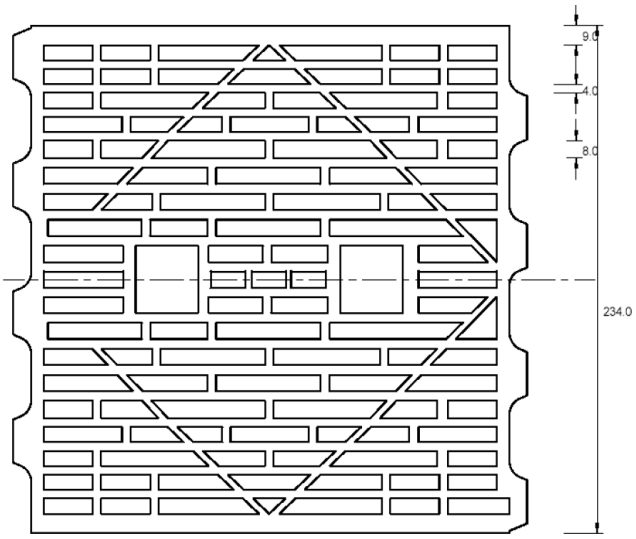

Hollow clay brick HLzW 6-0,7-8DF
according to EN 771-1
length/width/height = 250 mm/240 mm/240 mm
$f_b \geq 6$ N/mm^2 / $\rho \geq 0{,}8$ kg/dm^3

Brick N° 7

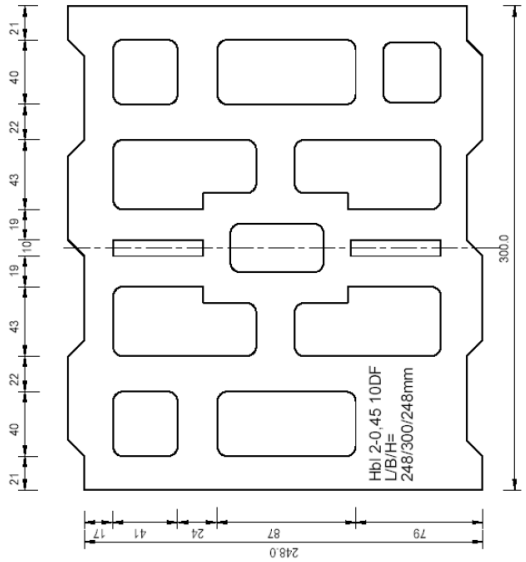

Lightweight concrete hollow block
Hbl 2-0,45-10DF
according to EN 771-3
length/width/height = 250 mm/300 mm/248 mm
$f_b \geq 2{,}0$ N/mm^2 / $\rho \geq 0{,}45$ kg/dm^3

Brick N° 8

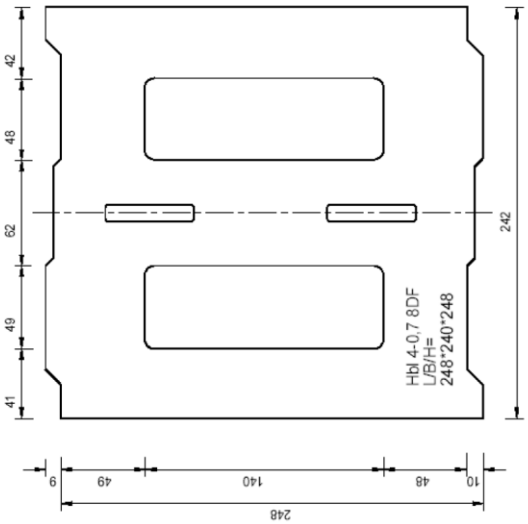

Lightweight concrete hollow block Hbl 4-0,7-8DF
according to EN 771-3
length/width/height = 250 mm/240 mm/248 mm
$f_b \geq 4{,}0$ N/mm^2 / $\rho \geq 0{,}7$ kg/dm^3

Brick N° 9

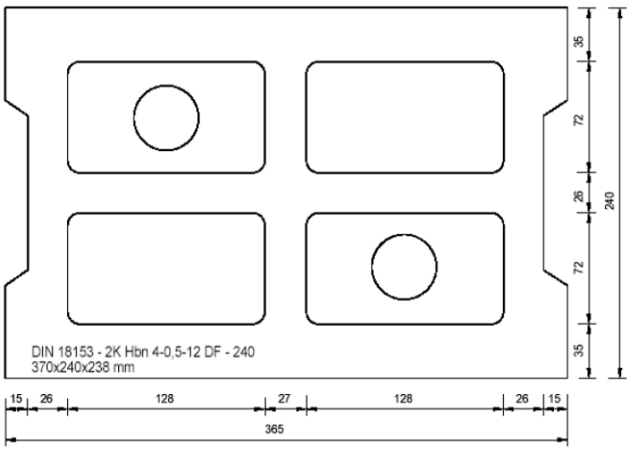

Concrete masonry unit Hbn 4-12DF
according to EN 771-3
length/width/height = 370 mm/240 mm/238 mm
$f_b \geq 4$ N/mm^2 / $\rho \geq 1{,}2$ kg/dm^3

SMART S-IRP for masonry	**Annex B 3**
Intended use Brick types and properties	

Table B3: Types and dimensions of block and bricks

Brick N° 10

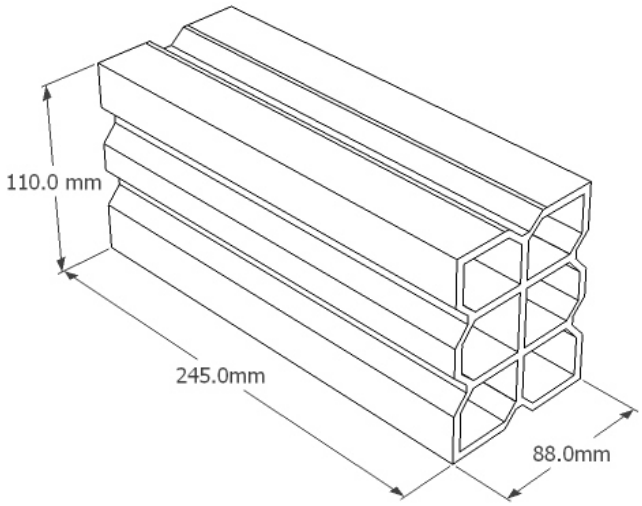

Hollow clay brick Hueco Doble
according to EN 771-1
length/width/height = 245 mm/110 mm/88 mm
$f_b \geq 2{,}5$ N/mm^2 / $\rho \geq 0{,}74$ kg/dm^3

Brick N° 11

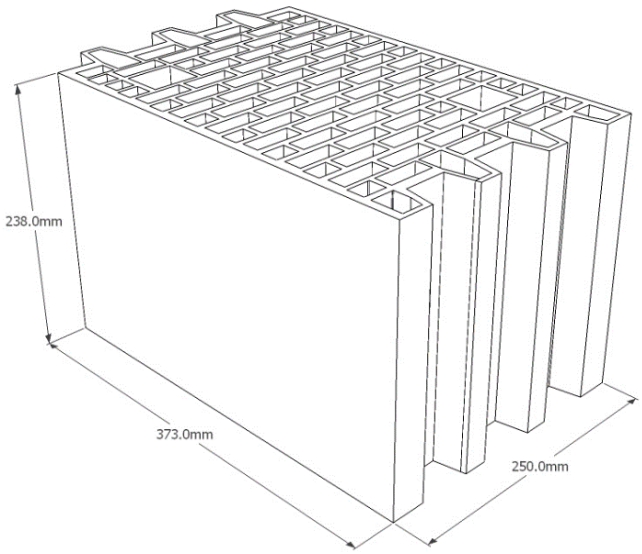

Hollow clay brick Porotherm 25 P+W KL15
according to EN 771-1
length/width/height = 373 mm/250 mm/238 mm
$f_b \geq 12$ N/mm^2 / $\rho \geq 0{,}9$ kg/dm^3

Brick N° 12

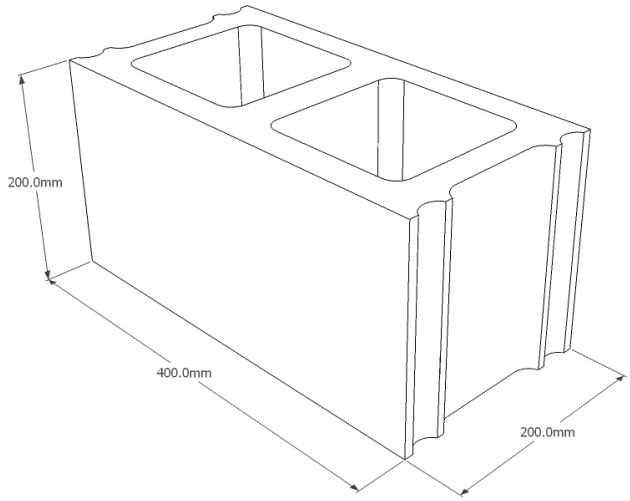

Concrete hollow block
Bloque Hormingon
according to EN 771-3
length/width/height = 400 mm/200 mm/200 mm
$f_b \geq 2{,}5$ N/mm^2 / $\rho \geq 1{,}7$ kg/dm^3

SMART S-IRP for masonry	**Annex B 4**
Intended use Brick types and properties	

Applicator gun

Applicator gun	A	B	C	D	E	F	G
Cartridge	Coaxial 380ml 400ml 410ml	Side by side 350ml	Foil capsule 150ml 300ml 550ml Tube Free System 300ml 350ml 550ml 600ml	Foil capsule 150ml 300ml Peeler 280ml	Coaxial 150ml	Side by side 825ml	Foil capsule 850ml

Cleaning brush type SMCH3

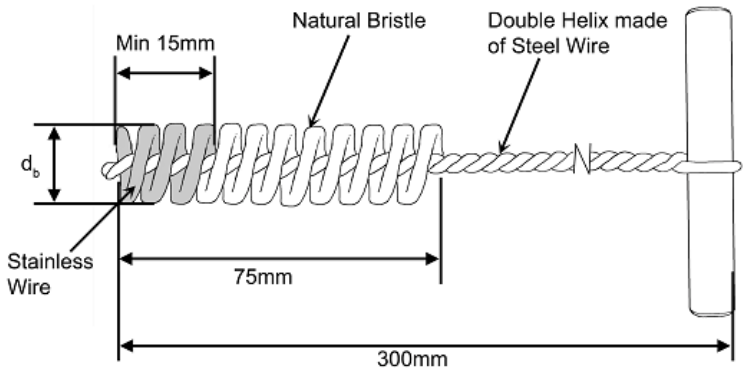

Cleaning pump type SMCH2

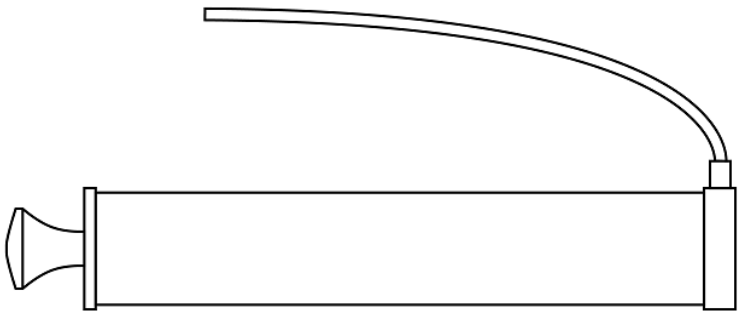

SMART S-IRP for masonry	**Annex B 5**
Intended use Applicator guns Cleaning brush, Cleaning pump	

Installation instructions

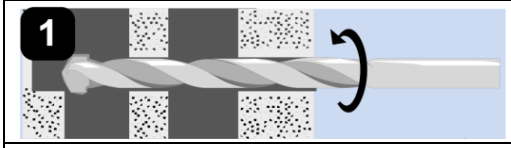	**1.** Drill the hole to the correct diameter and depth using a rotary percussive machine.
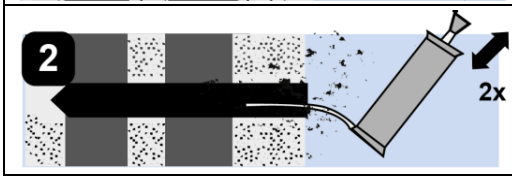	**2.** Use the cleaning pump to clean the hole.
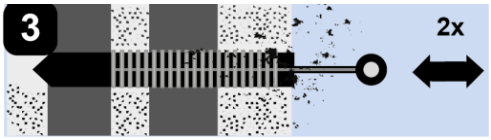	**3.** Use the cleaning brush to clean the hole. Diameter of Cleaning brush according to Table B4.
	REPEAT STEP 2 REPEAT STEP 3 REPEAT STEP 2
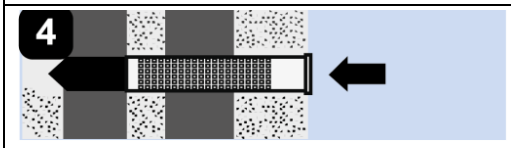	**4.** If used in hollow or perforated brick masonry: plug the centering cap and insert the correct perforated sleeve flush with the surface of the base material.
	**5.** Once the hole is prepared, remove the screw cap from the cartridge. Attach the mixer nozzle and place the cartridge in the applicator gun. Dispense the first part to waste, until an even colour is achieved.
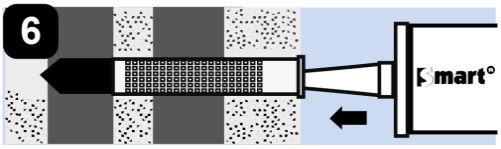	**6.** Remove any remaining water from the hole. Insert the nozzle to the far end of the hole (using extension tubing if necessary) and inject the resin, withdrawing the nozzle/tube as the hole fills. If used in hollow or perforated brick masonry: Insert mixer nozzle to the end of the perforated sleeve and completely fill the sleeve with resin. Withdraw the mixer nozzle as the sleeve fills.
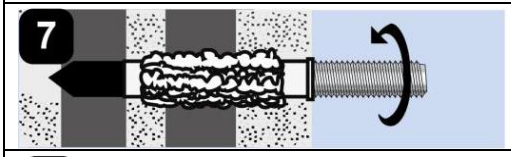	**7.** Immediately insert the fixing (steel element) slowly and with a slight twisting motion. Remove excess resin from around the mouth of the hole.
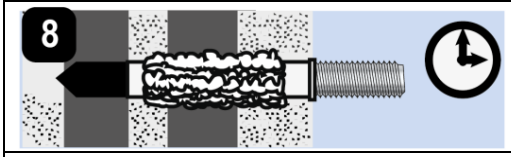	**8.** Leave the fixing undisturbed until the cure time (see Table B6) has elapsed.
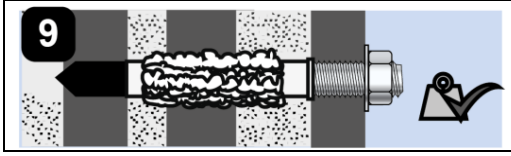	**9.** Attach the fixture and tighten the nut. Maximum installation torque moment according to Table B4.

SMART S-IRP for masonry	**Annex B 6**
Intended use Installation instructions	

Table B4: Installation parameters in solid and hollow masonry

Anchor type			Anchor rod							Internal threaded socket			
Size			M8	M10	M12	M8		M10		M12	M8		M10	M12
Internal threaded socket	$d_{to}xl_t$	[mm]	-	-	-	-		-		-	12x80		14x80	16x80
Sieve sleeve	l_s	[mm]	-	-	-	85		85		85	85		85	85
	d_s	[mm]	-	-	-	15	16	15	16	20	15	16	20	20
Nominal drill hole diameter	d_0	[mm]	15	15	20	15	16	15	16	20	15	16	20	20
Diameter of cleaning brush	d_b	[mm]	$20^{\pm1}$	$20^{\pm1}$	$22^{\pm1}$	$20^{\pm1}$		$20^{\pm1}$		$22^{\pm1}$	$20^{\pm1}$		$22^{\pm1}$	$22^{\pm1}$
Depth of the drill hole	h_0	[mm]	90											
Effective anchorage depth	h_{ef}	[mm]	85								80			
Diameter of clearance hole in the fixture	$d_f \leq$	[mm]	9	12	14	9		12		14	9		12	14
Torque moment	$T_{inst} \leq$	[mm]	2											

Table B5: Edge distances and spacing

Anchor rod									
Base material 1)	**M8**			**M10**			**M12**		
	$c_{cr} = c_{min}$	$s_{cr\,II} = s_{min\,II}$	$s_{cr\perp} = s_{min\perp}$	$c_{cr} = c_{min}$	$s_{cr\,II} = s_{min\,II}$	$s_{cr\perp} = s_{min\perp}$	$c_{cr} = c_{min}$	$s_{cr\,II} = s_{min\,II}$	$s_{cr\perp} = s_{min\perp}$
	[mm]	[mm]	[mm]	[mm]	[mm]	[mm]	[mm]	[mm]	[mm]
Brick N° 1	100	235	115	100	235	115	120	235	115
Brick N° 2	100	240	113	100	240	113	120	240	113
Brick N° 3	100	250	237	100	250	237	120	250	237
Brick N° 4	128	255	255	128	255	255	128	255	255
Brick N° 5	128	255	255	128	255	255	128	255	255
Brick N° 6	100	250	240	100	250	240	120	250	240
Brick N° 7	100	250	248	100	250	248	-	-	-
Brick N° 8	100	250	248	100	250	248	120	250	248
Brick N° 9	100	370	238	100	370	238	120	370	238
Brick N°10	100	245	110	100	245	110	120	245	110
Brick N°11	100	373	238	100	373	238	120	373	238
Brick N°12	100	400	200	-	-	-	120	400	200

Internal threaded socket									
Base material 1)	**M8**			**M10**			**M12**		
	$c_{cr} = c_{min}$	$s_{cr\,II} = s_{min\,II}$	$s_{cr\perp} = s_{min\perp}$	$c_{cr} = c_{min}$	$s_{cr\,II} = s_{min\,II}$	$s_{cr\perp} = s_{min\perp}$	$c_{cr} = c_{min}$	$s_{cr\,II} = s_{min\,II}$	$s_{cr\perp} = s_{min\perp}$
	[mm]	[mm]	[mm]	[mm]	[mm]	[mm]	[mm]	[mm]	[mm]
Brick N° 1	100	235	115	120	235	115	120	235	115
Brick N° 2	100	240	113	120	240	113	120	240	113
Brick N° 3	-	-	-	120	250	237	120	250	237
Brick N° 4	128	255	255	128	255	255	128	255	255
Brick N° 5	128	255	255	128	255	255	128	255	255
Brick N° 6	100	250	240	120	250	240	120	250	240
Brick N° 7	100	250	248	120	250	248	120	250	248
Brick N° 8	-	-	-	120	250	248	120	250	248
Brick N° 9	100	370	238	120	370	238	120	370	238

1) Brick N° according to Annex B 2 to B 4

SMART S-IRP for masonry

Intended use
Installation parameters

Annex B 7

Table B6: Minimum curing time

Resin cartridge temperature [°C]	T Work [mins]	Base material Temperature [°C]	T Load [mins]
min +5	18	min +5	145
+5 to +10	10	+5 to +10	
+10 to +20	6	+10 to +20	85
+20 to +25	5	+20 to +25	50
+25 to +30	4	+25 to +30	40
+30		+30	35

T work is typical gel time at highest temperature T load is set at the lowest temperature

SMART S-IRP
for masonry

Intended use
Working and curing time

Annex B 8

Table C1: Characteristic resistance under tension and shear loading

Base material	Anchor rods $N_{Rk} = V_{Rk}$ [kN] 1)			Internal threaded sockets $N_{Rk} = V_{Rk}$ [kN] 1)		
	M8	M10	M12	M8	M10	M12
Brick N° 1	2,5	2,0	2,0	1,5	2,5	2,5
Brick N° 2	0,75	1,2	0,5	0,6	0,75	0,9
Brick N° 3	0,75	1,2	0,5	-	0,75	0,4
Brick N° 4	1,5	1,5	3,0	2,0	3,0	4,0
Brick N° 5	0,75	0,9	1,5	2,0	1,5	0,9
Brick N° 6	1,2	1,2	0,9	0,9	1,5	0,6
Brick N° 7	0,6	0,3	-	0,5	0,3	0,75
Brick N° 8	0,6	1,5	1,2	-	0,4	0,6
Brick N° 9	2,5	1,5	2,5	0,6	1,2	0,9
Brick N° 10	0,75	0,5	0,75	-	-	-
Brick N° 11	1,5	1,5	1,5	-	-	-
Brick N° 12	0,75	-	0,6	-	-	-

1) For design according TR 054: $N_{Rk} = N_{Rk,p} = N_{Rk,b} = N_{Rk,s}$; $N_{Rk,pb}$ according to TR 054
For $V_{Rk,s}$ see Annex C1, Table C2; Calculation of $V_{Rk,pb}$ and $V_{Rk,c}$ according to TR 054

Table C2: Characteristic bending moment

Size			M8	M10	M12
Steel grade **5.8**	$M_{Rk,s}$	[N.m]	19	37	66
Steel grade **8.8**	$M_{Rk,s}$	[N.m]	30	60	105
Steel grade **10.9**	$M_{Rk,s}$	[N.m]	37	75	131
Stainless steel grade **A2-70**, **A4-70**	$M_{Rk,s}$	[N.m]	26	52	92
Stainless steel grade **A4-80**	$M_{Rk,s}$	[N.m]	30	60	105
Stainless steel grade **1.4529** strength class **70**	$M_{Rk,s}$	[N.m]	26	52	92
Stainless steel grade **1.4565** strength class **70**	$M_{Rk,s}$	[N.m]	26	52	92

Table C3: Displacements under tension and shear load

Base material	F [kN]	δ_{N0} [mm]	$\delta_{N\infty}$ [mm]	δ_{V0} [mm]	$\delta_{V\infty}$ [mm]
Solid bricks	$N_{Rk} / (1{,}4 \cdot \gamma_M)$	0,6	1,2	1,0 1)	1,5 1)
Perforated and hollow bricks		0,14	0,28	1,0 1)	1,5 1)

1) the hole gap between bolt and fixture shall be considered additionally

Table C4: β - factors for job site tests according to TR 053

Brick N°	N° 1	N° 2	N° 3	N° 4	N° 5	N° 6	N° 7	N° 8	N° 9	N° 10	N° 11	N° 12
β - factor	0,62	0,28	0,22	0,48	0,26	0,43	0,42	0,36	0,60	0,65	0,65	0,59

SMART S-IRP
for masonry

Performances
Characteristic resistance, displacement
β-factors for job site testing under tension load

Annex C 1