INSTYTUT TECHNIKI BUDOWLANEJ
PL 00-611 WARSZAWA
ul. Filtrowa 1
tel.: (+48 22) 825-04-71
(+48 22) 825-76-55
fax: (+48 22) 825-52-86
www.itb.pl

Designated according to Article 29 of Regulation (EU) No 305/2011 and member of EOTA (European Organisation for Technical Assessment)

Member of EOTA
www.eota.eu

European Technical Assessment

ETA-15/0594 of 30/09/2015

General Part

Technical Assessment Body issuing the European Technical Assessment	Instytut Techniki Budowlanej
Trade name of the construction product	SM0IA, SMIAL, SMIAI and SMIAD
Product family to which the construction product belongs	Deformation-controlled expansion anchors for use in non-cracked concrete
Manufacturer	PGB – Polska sp. z o.o. ul. Jondy 5 44-100 Gliwice Poland
Manufacturing plant(s)	Manufacturing Plants no. 5a and 5b
This European Technical Assessment contains	13 pages including 3 Annexes which form an integral part of this assessment
This European Technical Assessment is issued in accordance with Regulation (EU) No 305/2011, on the basis of	Guideline for European Technical Approval ETAG 001, Edition April 2013 "Metal anchors for use in concrete – Part 1: Anchors in general and Part 4: Deformation-controlled expansion anchors", used as European Assessment Document (EAD)

Specific Part

1 Technical description of the product

The SM0IA, SMIAL, SMIAI and SMIAD are deformation-controlled expansion anchors. The anchors SM0IA, SMIAL and SMIAD are made of zinc plated steel and SMIAI are made of stainless steel.

The anchor is installed in a drilled hole and anchored by deformation-controlled expansion.

The description of the product is given in Annex A1.

2 Specification of the intended use in accordance with the applicable European Assessment Document (EAD)

The performances given in Section 3 are only valid if the anchors are used in compliance with the specifications and conditions given in Annexes B1 to B3.

The performances given in this European Technical Assessment are based on an assumed working life of the anchor of 50 years. The indications given on the working life cannot be interpreted as a guarantee given by the producer or the Technical Assessment Body, but are to be regarded only as a means for choosing the right products in relation to the expected economically reasonable working life of the works.

3 Performance of the product and references to the methods used for its assessment

3.1 Performance of the product

3.1.1 Mechanical resistance and stability (BWR 1)

Essential characteristic	Performance
Characteristic resistance	See Annexes C1 to C8
Edge distance and spacing	See Annexes C1 to C8

3.1.2 Safety in case of fire (BWR 2)

Essential characteristic	Performance
Reaction to fire	Anchors satisfy requirements for Class A1
Resistance to fire	No performance assessed

3.1.3 Hygiene, health and the environment (BWR 3)

Regarding the dangerous substances clauses contained in this European Technical Assessment, there may be requirements applicable to the products falling within its scope (e.g. transposed European legislation and national laws, regulations and administrative provisions). In order to meet the provisions of the Construction Products Regulation, these requirements need also to be complied with, when and where they apply.

3.1.4 Safety in use (BWR 4)

For Basic Requirement Safety in use the same criteria are valid as for Basic Requirement Mechanical resistance and stability (BWR 1).

3.1.5 Sustainable use of natural resources (BWR 7)

No performance assessed.

3.1.6 General aspects relating to fitness for use

Durability and serviceability are only ensured if the specifications of intended use according to Annex B1 are kept.

3.2 Methods used for the assessment

The assessment of fitness of the anchors for the intended use in relation to the requirements for mechanical resistance and stability and safety in use in the sense of the Basic Requirements 1 and 4 has been made in accordance with the ETAG 001 *"Metal anchors for use in concrete"*, Part 1: "*Anchors in general*" and Part 4: "*Deformation-controlled expansion anchors*".

4 Assessment and verification of constancy of performance (AVCP) system applied, with reference to its legal base

According to Decision 96/582/EC of the European Commission the system of assessment and verification of constancy of performance (see Annex V to Regulation (EU) No 305/2011) given in the following table applies.

Product	Intended use	Level or class	System
Metal anchors for use in concrete	For fixing and/or supporting to concrete structural elements (which contributes to the stability of the works) or heavy units	–	1

5 Technical details necessary for the implementation of the AVCP system, as provided for in the applicable European Assessment Document (EAD)

Technical details necessary for the implementation of the AVCP system are laid down in the control plan which is deposited at Instytut Techniki Budowlanej.

For type testing the results of the tests performed as part of the assessment for the European Technical Assessment shall be used unless there are changes in the production line or plant. In such cases the necessary type testing has to be agreed between Instytut Techniki Budowlanej and the notified body.

Issued in Warsaw on 30/09/2015 by Instytut Techniki Budowlanej

Marcin M. Kruk, PhD
Director of ITB

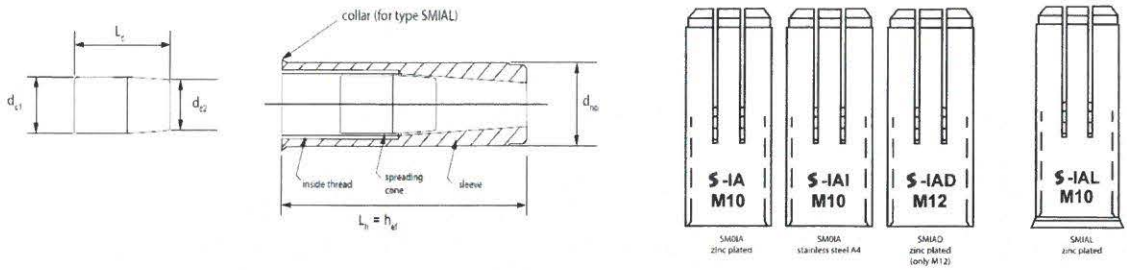

Table A1. Anchors SM0IA, SMIAL, SMIAD – dimensions and materials

Anchor type		SM0IA, SMIAL							SMIAD
Anchor size		M6x25	M8x30	M10x30	M10x40*	M12x50	M16x65	M20x80	M12x50
Anchor length L_H	[mm]	25	30	30	40	50	65	80	50
Thread inside	[mm]	6	8	10	10	12	16	20	12
External diameter d_{nom}	[mm]	8	10	12	12	15	20	25	16
Anchor material		cold forming steel C1008 or EN 10277; thickness of zinc coating ≥ 5 μm acc. to EN ISO 4042 $f_{uk} \geq 450$ N/mm² and $f_{yk} \geq 360$ N/mm² *cold forming steel C1015 or EN 10277; thickness of zinc coating ≥ 5 μm acc. to EN ISO 4042 $f_{uk} \geq 450$ N/mm² and $f_{yk} \geq 360$ N/mm²							

Table A2. Anchor SMIAI – dimensions and materials

Anchor type		SMIAI					
Anchor size		M6x25	M8x30	M10x40	M12x50	M16x65	M20x80
Anchor length L_H	[mm]	25	30	40	50	65	80
Thread inside	[mm]	6	8	10	12	16	20
External diameter d_{nom}	[mm]	8	10	12	15	20	25
Anchor material		stainless steel 1.4401 acc. to EN 10088 (AISI 316) $f_{uk} \geq 500$ N/mm² and $f_{yk} \geq 210$ N/mm²					

Table A3. Spreading cone – dimensions and materials

Spreading cone		M6	M8	M10	M12	M16	M20
Rear diameter d_{c1}	[mm]	5,0	6,4	8,0	10,3	13,5	16,8
Front diameter d_{c2}	[mm]	4,3	5,1	6,8	7,8	13,0	15,2
Length l_c	[mm]	9,8	11,4	16,0	20,8	29,2	30,0
Spreading cone material		cold forming steel C1008; thickness of zinc coating > 5 μm or stainless steel 1.4401, 1.4404 acc. to EN 10088					

SPECIFICATION OF INTENDED USE

Anchorages subject to:

- Static and quasi-static loads: sizes from M6 to M20.

Base material:

- Reinforced or unreinforced normal weight concrete of strength class C20/25 at minimum to C50/60 at maximum according to EN 206.
- Non-cracked concrete.

Use conditions (environmental conditions):

- Structures subject to dry internal conditions:
  zinc coated steel (all the sizes) and stainless steel (size M6).
- Structures subject to dry internal conditions and also external atmospheric exposure (including industrial and marine environment) or exposure in permanently damp internal conditions if no particular aggressive conditions exist:
  stainless steel (sizes M8 to M20)
  Note: Particular aggressive conditions are e.g. permanent, alternating immersion in seawater or the splash zone of seawater, chloride atmosphere of indoor swimming pools or atmosphere with extreme chemical pollution (e.g. in desulphurization plants or road tunnels where de-icing materials are used).

Design:

- Anchorages are designed under the responsibility of an engineer experienced in anchorages and concrete work.
- Verifiable calculation notes and drawings are prepared taking account of the loads to be transmitted. The position of the anchor is indicated on the design drawings (e.g. position of the anchor relative to reinforcement or to supports, etc.).
- Anchorages under static and quasi-static loads are designed in accordance with ETAG 001, Annex C, design method C, Edition August 2010.

Installation:

- Anchor installation carried out by appropriately qualified personnel and under the supervision of the person responsible for technical matters of the site.
- Use of the anchor only as supplied by the manufacturer without exchanging any component of the anchor.
- Anchor installation in accordance with the manufacturer's specifications and drawings and using the appropriate tools.
- Check of concrete being well compacted, e.g. without significant voids.
- Positioning of the drill holes without damaging the reinforcement.
- In case of aborted hole: new drilling at a minimum distance away of twice the depth of the aborted hole or smaller distance if the aborted drill hole is filled with high strength mortar and if under shear or oblique tension load it is not in the direction of load application.
- Anchor installation such that the effective anchorage depth is complied with.

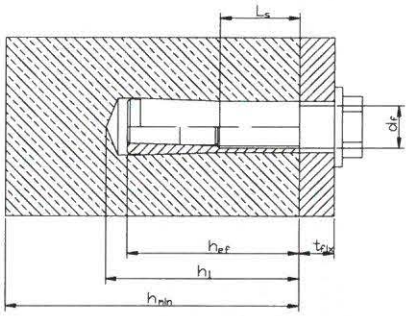

Table B1: Installation parameters – SM0IA and SMIAL

Anchor size	Effective anchorage depth	Drill hole depth	Drill hole diameter	Installation torque (max)	Thickness of concrete member (min)	Screwing depth (min)	Screwing depth (max)	Diameter of clearance hole in the fixture	Spacing (min)	Edge distance (min)
	[mm]	[mm]	[mm]	[Nm]	[mm]	[mm]	[mm]	[mm]	[mm]	[mm]
	h_{ef}	h_1	d_0	max T_{inst}	h_{min}	$L_{s,\,min}$	$L_{s,\,max}$	d_f	S_{min}	c_{min}
M6x25	25	30	8	4,5	100	6	10	7	60	105
M8x30	30	32	10	11	100	8	13	9	90	105
M10x30	30	32	12	22	100	8	13	12	90	105
M10x40	40	42	12	22	100	10	17	12	90	140
M12x50	50	54	15	38	100	12	21	16	100	175
M16x65	65	70	20	98	130	16	27	18	130	230
M20x80	80	85	25	130	160	20	34	22	160	280

Table B2: Installation parameters – SMIAI and SMIAD

Anchor size	Effective anchorage depth	Drill hole depth	Drill hole diameter	Installation torque (max)	Thickness of concrete member (min)	Screwing depth (min)	Screwing depth (max)	Diameter of clearance hole in the fixture	Spacing	Edge distance
	[mm]	[mm]	[mm]	[Nm]	[mm]	[mm]	[mm]	[mm]	[mm]	[mm]
	h_{ef}	h_1	d_0	max T_{inst}	h_{min}	$L_{s,\,min}$	$L_{s,\,max}$	d_f	S_{min}	c_{min}
M6x25	25	30	8	4,5	100	6	10	7	60	105
M8x30	30	32	10	11	100	8	13	9	90	105
M10x40	40	42	12	22	100	10	17	12	90	140
M12x50	50	54	15	38	100	12	21	16	100	175
M12x50*	50	54	16	38	100	12	21	16	100	175
M16x65	65	70	20	98	130	16	27	18	130	230
M20x80	80	85	25	130	160	20	34	22	160	280

* SMIAD only

Fastening screws or anchor threaded rods:

Steel, property class 4.6 / 4.8 / 5.6 / 6.8 / 8.8 according to EN-ISO 898-1; thickness of galvanizing ≥ 5 μm (SM0IA, SMIAD, SMIAL)

Stainless steel 1.4401 according to EN 10088, property class 50 or 70 according to EN ISO 3506 (SMIAI)

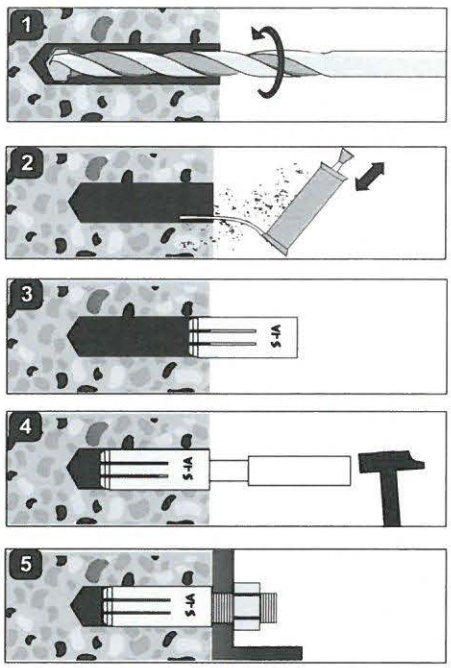

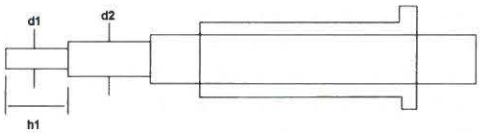

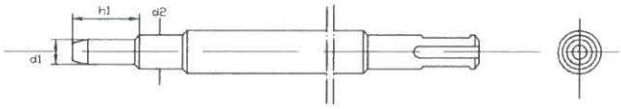

Size	d1	d2	h1
M6	5,0	7,5	15,0
M8	6,5	9,5	18,0
M10	8,0	11,5	24,0
M12	10,2	14,5	30,0
M16	13,5	18,0	36,0
M20	16,5	22,0	50,0

SM0IA, SMIAL, SMIAI and SMIAD	**Annex B3** of European Technical Assessment ETA-15/0594
Intended use Installation instruction and tools	

Table C1: Characteristic resistance for tension loads in non-cracked concrete – SM0IA and SMIAL

Size			M6x25	M8x30	M10x30	M10x40	M12x50	M16x65	M20x80
Steel failure									
Steel failure with threaded rod grade 4.6									
Characteristic resistance	$N_{Rk,s}$	[kN]	8,0	14,6	23,2	23,2	33,7	62,8	98,0
Partial safety factor	γ_{Ms}	[-]	2,00						
Steel failure with threaded rod grade 4.8									
Characteristic resistance	$N_{Rk,s}$	[kN]	8,0	14,6	23,2	23,2	33,7	62,8	98,0
Partial safety factor	γ_{Ms}	[-]	1,50						
Steel failure with threaded rod grade 5.6									
Characteristic resistance	$N_{Rk,s}$	[kN]	8,4	15,4	24,4	29,0	35,4	65,9	102,9
Partial safety factor	γ_{Ms}	[-]	1,50						
Steel failure with threaded rod grade 5.8									
Characteristic resistance	$N_{Rk,s}$	[kN]	8,4	15,4	24,4	29,0	35,4	65,9	102,9
Partial safety factor	γ_{Ms}	[-]	1,50						
Steel failure with threaded rod grade 6.8									
Characteristic resistance	$N_{Rk,s}$	[kN]	8,4	15,4	24,4	30,2	35,4	65,9	102,9
Partial safety factor	γ_{Ms}	[-]	1,50						
Steel failure with threaded rod grade 8.8									
Characteristic resistance	$N_{Rk,s}$	[kN]	8,4	15,4	24,4	30,2	35,4	65,9	120,9
Partial safety factor	γ_{Ms}	[-]	1,50						
Pull-out failure									
Characteristic resistance in non-cracked concrete C20/25	$N_{Rk,p}$ [kN]	[kN]	5	1)	1)	12	1)	20	35
Increasing factor for $N_{Rk,p}$	ψ_c	C30/37	1,05	1,05	1,05	1,05	1,05	1,22	1,22
		C40/50	1,08	1,08	1,08	1,08	1,08	1,41	1,41
		C50/60	1,11	1,11	1,11	1,11	1,11	1,55	1,55
Partial safety factor	γ_{Mp}	[-]	2,10	2,10	2,10	2,10	1,80	1,80	2,10
Concrete cone failure and splitting									
Effective anchorage depth	h_{ef}	[mm]	25	30	30	40	50	65	80
Partial safety factor	γ_{Mc}	[-]	2,10	2,10	2,10	2,10	1,80	1,80	2,10
Spacing	$s_{cr,N}$	[mm]	50	60	60	80	100	130	160
Edge distance	$c_{cr,N}$	[mm]	75	90	90	120	150	195	240
Partial safety factor	γ_{Msp}	[-]	2,10	2,10	2,10	2,10	1,80	1,80	2,10

1) Pull-out value is not decisive

Table C2: Displacement under tension and shear loads – SM0IA and SMIAL

Size		M6x25	M8x30	M10x30	M10x40	M12x50	M16x65	M20x80
Tension and shear loads in non-cracked concrete	N = V [kN]	1,70	2,82	2,82	4,08	7,10	7,94	11,90
Displacement	δ_0 [mm]	2,56	2,22	2,14	1,55	7,24	1,93	2,15
	δ_∞ [mm]	1,44	1,44	1,44	1,44	1,44	1,44	1,44

Table C3: Characteristic resistance for shear loads in non-cracked concrete – SM0IA and SMIAL

Size			M6x25	M8x30	M10x30	M10x40	M12x50	M16x65	M20x80
Steel failure without lever arm									
Steel failure with threaded rod grade 4.6									
Characteristic resistance	$V_{Rk,s}$	[kN]	4,0	7,3	11,6	11,6	16,9	41,4	49,0
Partial safety factor	γ_{Ms}	[-]	1,67						
Steel failure with threaded rod grade 4.8									
Characteristic resistance	$V_{Rk,s}$	[kN]	4,0	7,3	11,6	11,6	16,9	41,4	49,0
Partial safety factor	γ_{Ms}	[-]	1,25						
Steel failure with threaded rod grade 5.6									
Characteristic resistance	$V_{Rk,s}$	[kN]	5,0	9,2	14,5	14,5	21,1	39,3	61,3
Partial safety factor	γ_{Ms}	[-]	1,25						
Steel failure with threaded rod grade 5.8									
Characteristic resistance	$V_{Rk,s}$	[kN]	5,0	9,2	14,5	14,5	21,1	39,3	61,3
Partial safety factor	γ_{Ms}	[-]	1,25						
Steel failure with threaded rod grade 6.8									
Characteristic resistance	$V_{Rk,s}$	[kN]	6,0	11,0	17,4	17,4	25,3	47,1	73,5
Partial safety factor	γ_{Ms}	[-]	1,25						
Steel failure with threaded rod grade 8.8									
Characteristic resistance	$V_{Rk,s}$	[kN]	8,0	14,6	23,2	23,2	33,7	62,8	98,0
Partial safety factor	γ_{Ms}	[-]	1,25						
Steel failure with lever arm									
Steel failure with threaded rod grade 4.6									
Characteristic resistance	$M^0_{Rk,s}$	[Nm]	6,1	15,0	29,9	29,9	52,4	133,3	259,8
Partial safety factor	γ_{Ms}	[-]	1,67						
Steel failure with threaded rod grade 4.8									
Characteristic resistance	$M^0_{Rk,s}$	[Nm]	6,1	15,0	29,9	29,9	52,4	133,3	259,8
Partial safety factor	γ_{Ms}	[-]	1,25						
Steel failure with threaded rod grade 5.6									
Characteristic resistance	$M^0_{Rk,s}$	[Nm]	7,6	18,8	37,4	37,4	65,6	166,6	324,8
Partial safety factor	γ_{Ms}	[-]	1,25						
Steel failure with threaded rod grade 5.8									
Characteristic resistance	$M^0_{Rk,s}$	[Nm]	7,6	18,8	37,4	37,4	65,6	166,6	324,8
Partial safety factor	γ_{Ms}	[-]	1,25						
Steel failure with threaded rod grade 6.8									
Characteristic resistance	$M^0_{Rk,s}$	[Nm]	9,2	22,5	44,9	44,9	78,7	199,9	389,7
Partial safety factor	γ_{Ms}	[-]	1,25						
Steel failure with threaded rod grade 8.8									
Characteristic resistance	$M^0_{Rk,s}$	[Nm]	12,2	30,0	59,9	59,9	104,9	266,6	519,7
Partial safety factor	γ_{Ms}	[-]	1,25						
Concrete pry-out failure									
Factor k acc. to ETAG 001, Annex C	k	[-]	1,0	1,0	1,0	1,0	1,0	2,0	2,0
Partial safety factor	γ_{Mc}	[-]	1,50						
Concrete edge failure									
Effective anchor length under shear loads	l_f	[mm]	25	30	30	40	50	65	80
Outside diameter of the anchor	d_{nom}	[mm]	8	10	12	12	15	20	25
Partial safety factor	γ_{Mc}	[-]	1,50						

Table C4: Characteristic resistance for tension loads in non-cracked concrete – SMIAI

Size			SMIAI					
			M6x25	M8x30	M10x40	M12x50	M16x65	M20x80
Steel failure								
Steel failure with stainless steel threaded rod A4-50								
Characteristic resistance	$N_{Rk,s}$	[kN]	10,1	18,3	29,0	42,2	78,5	122,5
Partial safety factor	γ_{Ms} 1)	[-]	1,50					
Steel failure with stainless steel threaded rod A4-70								
Characteristic resistance	$N_{Rk,s}$	[kN]	14,1	25,6	40,6	59,0	109,9	171,5
Partial safety factor	γ_{Ms}	[-]	1,50					
Pull-out failure								
Characteristic resistance in non-cracked concrete C20/25	$N_{Rk,p}$ [kN]	[kN]	3	5	6	12	20	20
Increasing factor for $N_{Rk,p}$	ψ_c	C30/37	1,18	1,18	1,18	1,18	1,18	1,18
		C40/50	1,35	1,35	1,35	1,35	1,35	1,35
		C50/60	1,46	1,46	1,46	1,46	1,46	1,46
Partial safety factor	γ_{Mp}	[-]	2,10	2,10	2,10	1,50	1,50	1,50
Concrete cone failure and splitting								
Effective anchorage depth	h_{ef}	[mm]	25	30	40	50	65	80
Partial safety factor	γ_{Mc}	[-]	2,10	2,10	2,10	1,50	1,50	1,50
Spacing	$s_{cr,N}$	[mm]	50	60	80	100	130	160
Edge distance	$c_{cr,N}$	[mm]	75	90	120	150	195	240
Partial safety factor	γ_{Msp}	[-]	2,10	2,10	2,10	1,50	1,50	1,50

Table C5: Characteristic resistance for shear loads in non-cracked concrete – SMIAI

Size			SMIAI					
			M6x25	M8x30	M10x40	M12x50	M16x65	M20x80
Steel failure without lever arm								
Steel failure with stainless steel threaded rod A4-50								
Characteristic resistance	$V_{Rk,s}$	[kN]	5,0	9,2	14,5	21,1	39,3	61,3
Partial safety factor	γ_{Ms}	[-]	1,25					
Steel failure with stainless steel threaded rod A4-70								
Characteristic resistance	$V_{Rk,s}$	[kN]	7,0	12,8	20,3	29,5	55,0	85,8
Partial safety factor	γ_{Ms}	[-]	1,25					
Steel failure with lever arm								
Steel failure with stainless steel threaded rod A4-50								
Characteristic resistance	$M^0_{Rk,s}$	[Nm]	7,6	18,8	37,4	65,6	166,6	324,8
Partial safety factor	γ_{Ms}	[-]	1,25					
Steel failure with stainless steel threaded rod A4-70								
Characteristic resistance	$M^0_{Rk,s}$	[Nm]	10,7	26,3	52,4	91,8	233,3	454,7
Partial safety factor	γ_{Ms}	[-]	1,25					
Concrete pry-out failure								
Factor k acc. to ETAG 001, Annex C	k	[-]	1,0	1,0	1,0	1,0	2,0	2,0
Partial safety factor	γ_{Mc}	[-]	1,50					
Concrete edge failure								
Effective anchor length under shear loads	l_f	[mm]	25	30	40	50	65	80
Outside diameter of the anchor	d_{nom}	[mm]	8	10	12	15	20	25
Partial safety factor	γ_{Mc}	[-]	1,50					

Table C6: Characteristic resistance for tension loads in non-cracked concrete – SMIAD

Size			SMIAD M12x50
Steel failure			
Steel failure with threaded rod grade 4.6			
Characteristic resistance	$N_{Rk,s}$	[kN]	33,7
Partial safety factor	γ_{Ms}	[-]	2,00
Steel failure with threaded rod grade 4.8			
Characteristic resistance	$N_{Rk,s}$	[kN]	33,7
Partial safety factor	γ_{Ms}	[-]	1,50
Steel failure with threaded rod grade 5.6			
Characteristic resistance	$N_{Rk,s}$	[kN]	35,4
Partial safety factor	γ_{Ms}	[-]	1,50
Steel failure with threaded rod grade 5.8			
Characteristic resistance	$N_{Rk,s}$	[kN]	35,4
Partial safety factor	γ_{Ms}	[-]	1,50
Steel failure with threaded rod grade 6.8			
Characteristic resistance	$N_{Rk,s}$	[kN]	35,4
Partial safety factor	γ_{Ms}	[-]	1,50
Steel failure with threaded rod grade 8.8			
Characteristic resistance	$N_{Rk,s}$	[kN]	35,4
Partial safety factor	γ_{Ms}	[-]	1,50
Pull-out failure			
Characteristic resistance in non-cracked concrete C20/25	$N_{Rk,p}$ [kN]	[kN]	1)
Increasing factor for $N_{Rk,p}$	ψ_c	C30/37	1,05
		C40/50	1,08
		C50/60	1,11
Partial safety factor	γ_{Mp}	[-]	1,80
Concrete cone failure and splitting			
Effective anchorage depth	h_{ef}	[mm]	50
Partial safety factor	γ_{Mc}	[-]	1,80
Spacing	$s_{cr,N}$	[mm]	100
Edge distance	$c_{cr,N}$	[mm]	150
Partial safety factor	γ_{Msp}	[-]	1,80

1) Pull-out value is not decisive

Table C7: Displacement under tension and shear loads – SMIAI and SMIAD

Size		SMIAI						SMIAD
		M6x25	M8x30	M10x40	M12x50	M16x65	M20x80	M12x50
Tension and shear loads in non-cracked concrete	N = V [kN]	1,02	1,70	2,04	5,71	9,52	9,52	7,10
Displacement	δ_0 [mm]	2,24	1,23	1,95	3,54	4,30	2,10	2,41
	δ_∞ [mm]	1,27	1,27	1,27	1,27	1,27	1,27	1,44

Table C8: Characteristic resistance for shear loads in non-cracked concrete – SMIAD

Size			SMIAD M12x50
Steel failure without lever arm			
Steel failure with threaded rod grade 4.6			
Characteristic resistance	$V_{Rk,s}$	[kN]	49,0
Partial safety factor	γ_{Ms}	[-]	1,67
Steel failure with threaded rod grade 4.8			
Characteristic resistance	$V_{Rk,s}$	[kN]	49,0
Partial safety factor	γ_{Ms}	[-]	1,25
Steel failure with threaded rod grade 5.6			
Characteristic resistance	$V_{Rk,s}$	[kN]	61,3
Partial safety factor	γ_{Ms}	[-]	1,25
Steel failure with threaded rod grade 5.8			
Characteristic resistance	$V_{Rk,s}$	[kN]	61,3
Partial safety factor	γ_{Ms}	[-]	1,25
Steel failure with threaded rod grade 6.8			
Characteristic resistance	$V_{Rk,s}$	[kN]	73,5
Partial safety factor	γ_{Ms}	[-]	1,25
Steel failure with threaded rod grade 8.8			
Characteristic resistance	$V_{Rk,s}$	[kN]	98,0
Partial safety factor	γ_{Ms}	[-]	1,25
Steel failure with lever arm			
Steel failure with threaded rod grade 4.6			
Characteristic resistance	$M^0_{Rk,s}$	[Nm]	52,4
Partial safety factor	γ_{Ms}	[-]	1,67
Steel failure with threaded rod grade 4.8			
Characteristic resistance	$M^0_{Rk,s}$	[Nm]	52,4
Partial safety factor	γ_{Ms}	[-]	1,25
Steel failure with threaded rod grade 5.6			
Characteristic resistance	$M^0_{Rk,s}$	[Nm]	65,6
Partial safety factor	γ_{Ms}	[-]	1,25
Steel failure with threaded rod grade 5.8			
Characteristic resistance	$M^0_{Rk,s}$	[Nm]	65,6
Partial safety factor	γ_{Ms}	[-]	1,25
Steel failure with threaded rod grade 6.8			
Characteristic resistance	$M^0_{Rk,s}$	[Nm]	78,7
Partial safety factor	γ_{Ms}	[-]	1,25
Steel failure with threaded rod grade 8.8			
Characteristic resistance	$M^0_{Rk,s}$	[Nm]	104,9
Partial safety factor	γ_{Ms}	[-]	1,25
Concrete pry-out failure			
Factor k acc. to ETAG 001, Annex C	k	[-]	1,0
Partial safety factor	γ_{Mc}	[-]	1,50
Concrete edge failure			
Effective anchor length	l_f	[mm]	50
Outside diameter of the anchor	d_{nom}	[mm]	16
Partial safety factor	γ_{Mc}	[-]	1,50